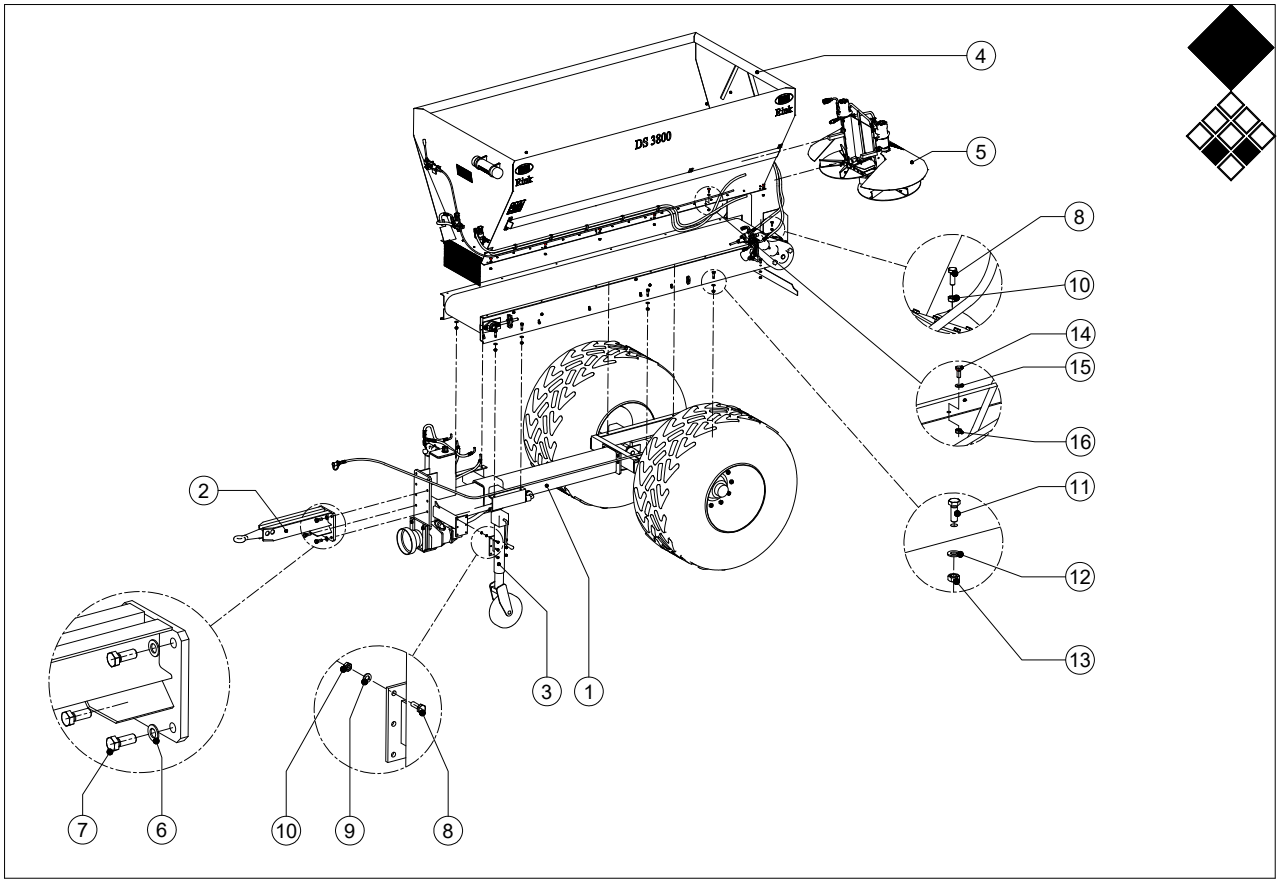

Redexim-Charterhouse Rink DS 3800 pag 01 code 0207

	PART #	DESCRIPTION	REMARKS	QUA
1		Frame	See page 02	1
2	RGS 16666	Towing bar complete		1
3	RGS 16548	Support tyre		1
4		Hopper	See page 04	1
5		Spreading device	See page 12	1
6	866.200.020	Spring washer M20		4
7	804.200.500	Bolt M20x50		4
8	804.120.350	Bolt M12x35		6
9	866.120.020	Spring washer M12		6
10	830.120.120	Nut M12		8
11	804.140.400	Bolt M14x40		8
12	864.140.030	Washer M14		8
13	830.140.140	Nut M14		8
14	804.100.250	Bolt M10x25		12
15	866.100.020	spring washer M10		12
16	830.100.100	Nut M10		12

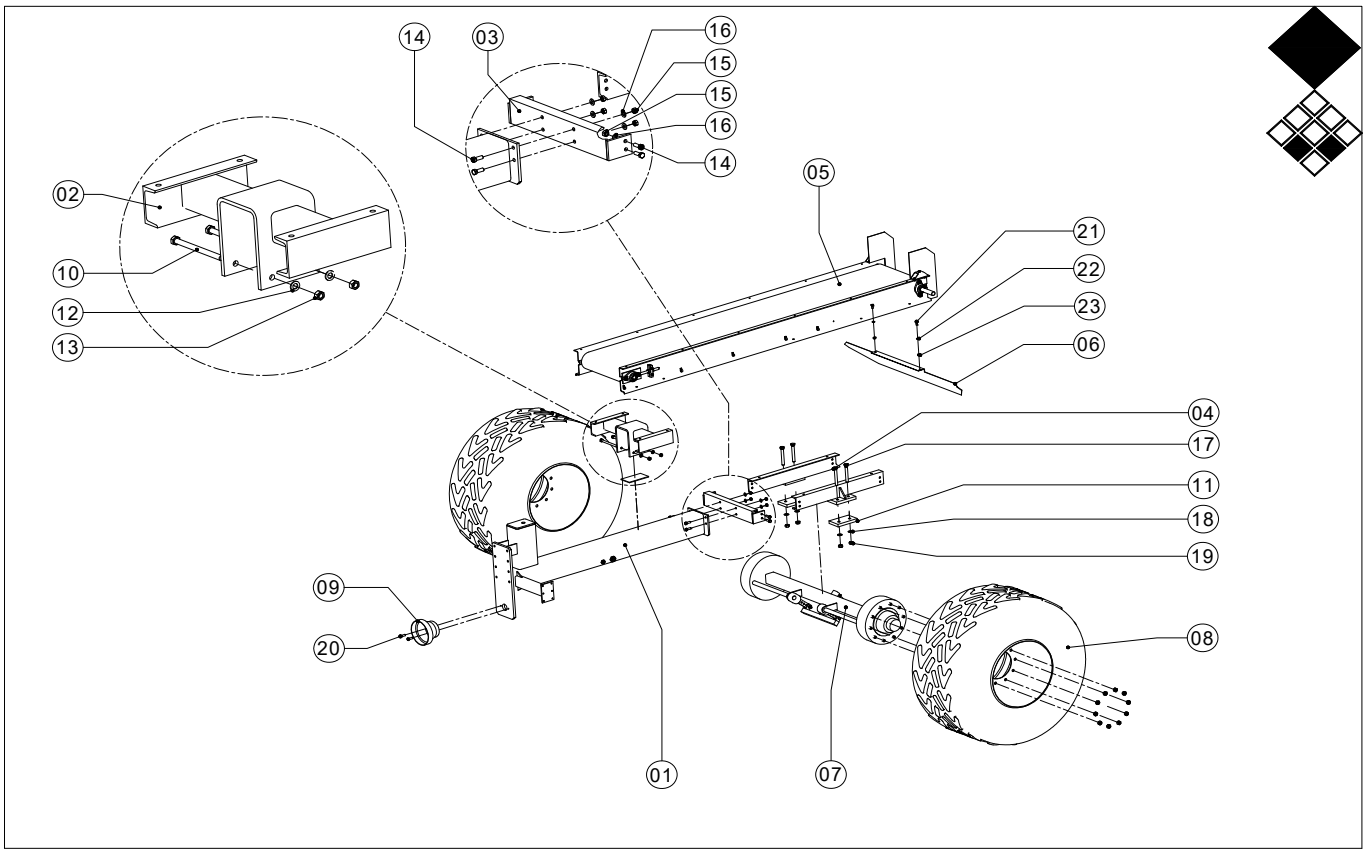

Redexim-Charterhouse Rink DS 3800 pag 02 code 0207

	PART #	DESCRIPTION	REMARKS	QUA
1	RGS 16645	Main beam		1
2	RGS 16648	Connecting part		1
3	RGS 16654	Connecting part		1
4	RGS 16652	Axle support		2
5		Belt	See page 03	1
6	RGS 16596	Spreading plate		1
7	RGS 16653	Brake axle		1
8	RGS 10765	Wheel complete 710/50R22.5		2
9	RGS 10795	PTO cover		1
10	802.162.000	Bolt M16 x 200		2
11	RGS 16651	Axle connecting plate		2
12	866.160.020	Spring washer M16		2
13	826.160.160	Nut M16		2
14	804.140.400	Bolt M14 x 40		8
15	866.140.020	Spring washer M14		6
16	826.140.140	Nut M14		8
17	802.121.800	Bolt M 20 x 180		4
18	866.200.020	Spring washer M20		4
19	826.200.200	Nut M20		4
20	802.120.500	Bolt M12 x 50		2
21	804.080.200	Bolt M8 x 20		2
22	864.080.030	Washer M8		2
23	830.080.080	Lock nut M8		2

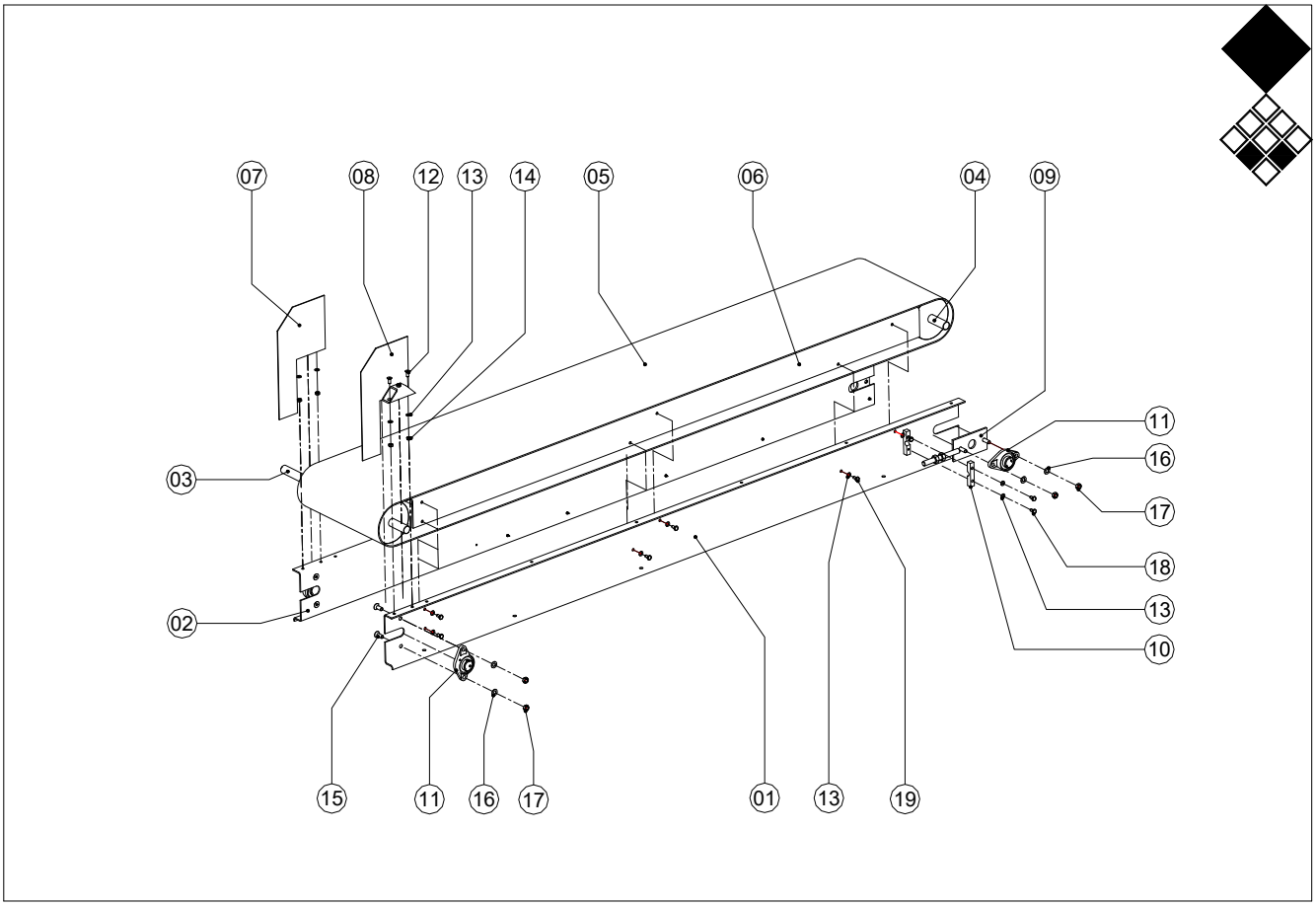

Redexim-Charterhouse Rink DS 3800 pag 03 code 0207

	PART #	DESCRIPTION	REMARKS	QUA
1	RGS 16610-L	Belt cover left		1
2	RGS 16610-R	belt cover right		1
3	RGS 16588	Belt front roller		1
4	RGS 16590	Belt rear roller		1
5	RGS 10766	Belt DS 3800		1
6	RGS 16615	Bottom plate		1
7	RGS 16629-L	Spinner bracket left		1
8	RGS 16629-R	Spinner bracket right		1
9	RGS 15704	Tension bracket		2
10	RGS 15328	Bracket		2
11	RGS 11035	Bearing UELFL 207		4
12	804.100.250	Bolt M10x25		4
13	866.100.020	Spring washer M10		16
14	826.100.100	Nut M10		4
15	804.140.350	Bolt M14x35		4
16	866.140.020	Spring washer M14		8
17	826.140.140	Nut M14		8
18	804.100.350	Bolt M10x35		4
19	804.100.250	Bolt M10x25		12

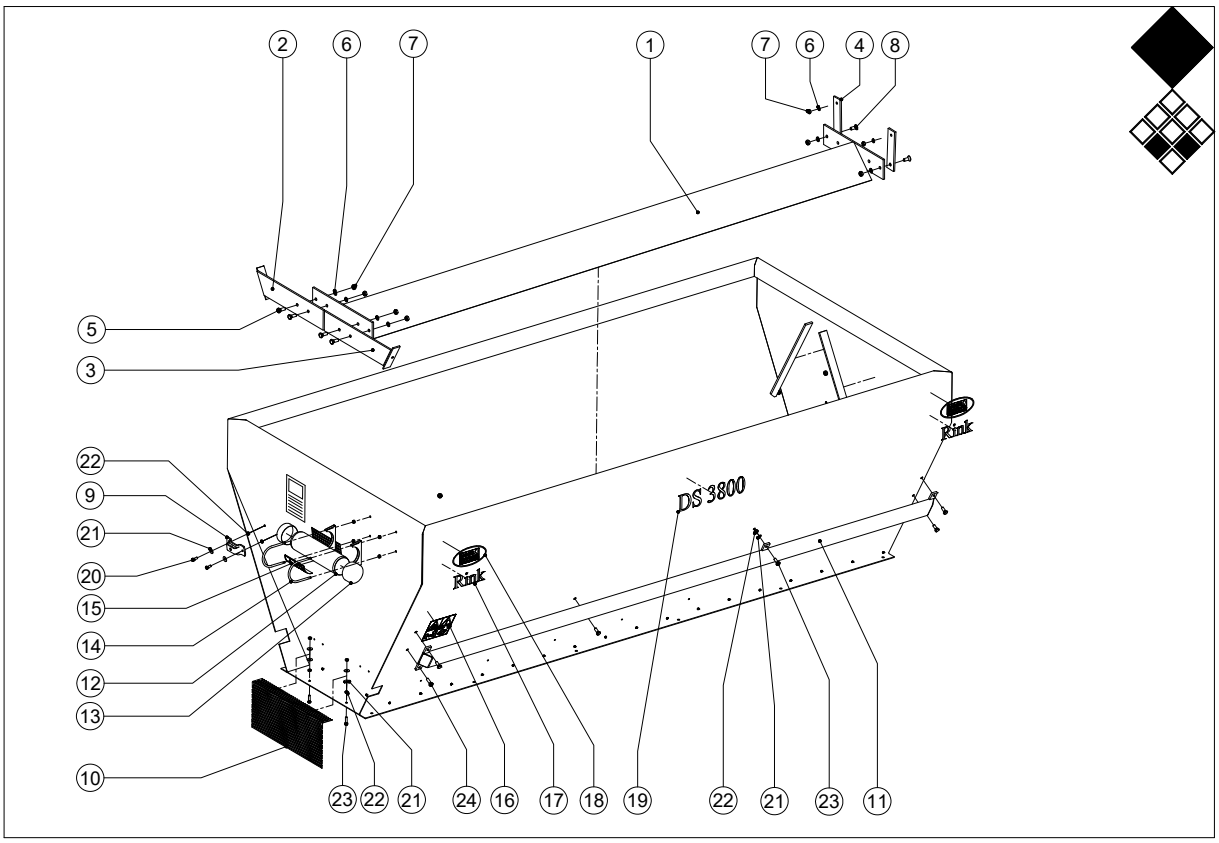

Redexim-Charterhouse Rink DS 3800 pag 04 code 0207

	PART #	DESCRIPTION	REMARKS	QUA
1	RGS 16669	Sand pressure releas plate		1
2	RGS 16671-R	Bracket right		1
3	RGS 16671-L	Bracket left		1
4	RGS 16673	Bracket		2
5	804.120.400	Bolt M12x40		4
6	866.120.020	Spring washer M12		8
7	826.120.120	Nut M12		8
8	816.120.400	Bolt M12x40		4
9	RGS 11023	Bracket		1
10	RGS 16635	Front cover		1
11	RGS 16674	Reinforcement beam		2
12	991.143.400	Manual/tool box empty		1
13	991.140.600	Cover manual tool box		2
14	848.901.200	U bolt complete		2
15	900.280.402	Safety label manual		1
16	933.280.402	Safety decall Rink		2
17	933.260.402	Decall Rink		4
18	900.260.403	Decall Redexim logo		4
19	933.260.418	Decall Rink DS		2
	933.260.422	Label 3800		2
20	804.080.200	Bolt M8x20		2
21	864.080.040	Washer M8		22
22	826.080.080	Nut M8		24
23	804.080.300	Bolt M8 x 30		14
	933.120.417	Manual Rink DS 3800		

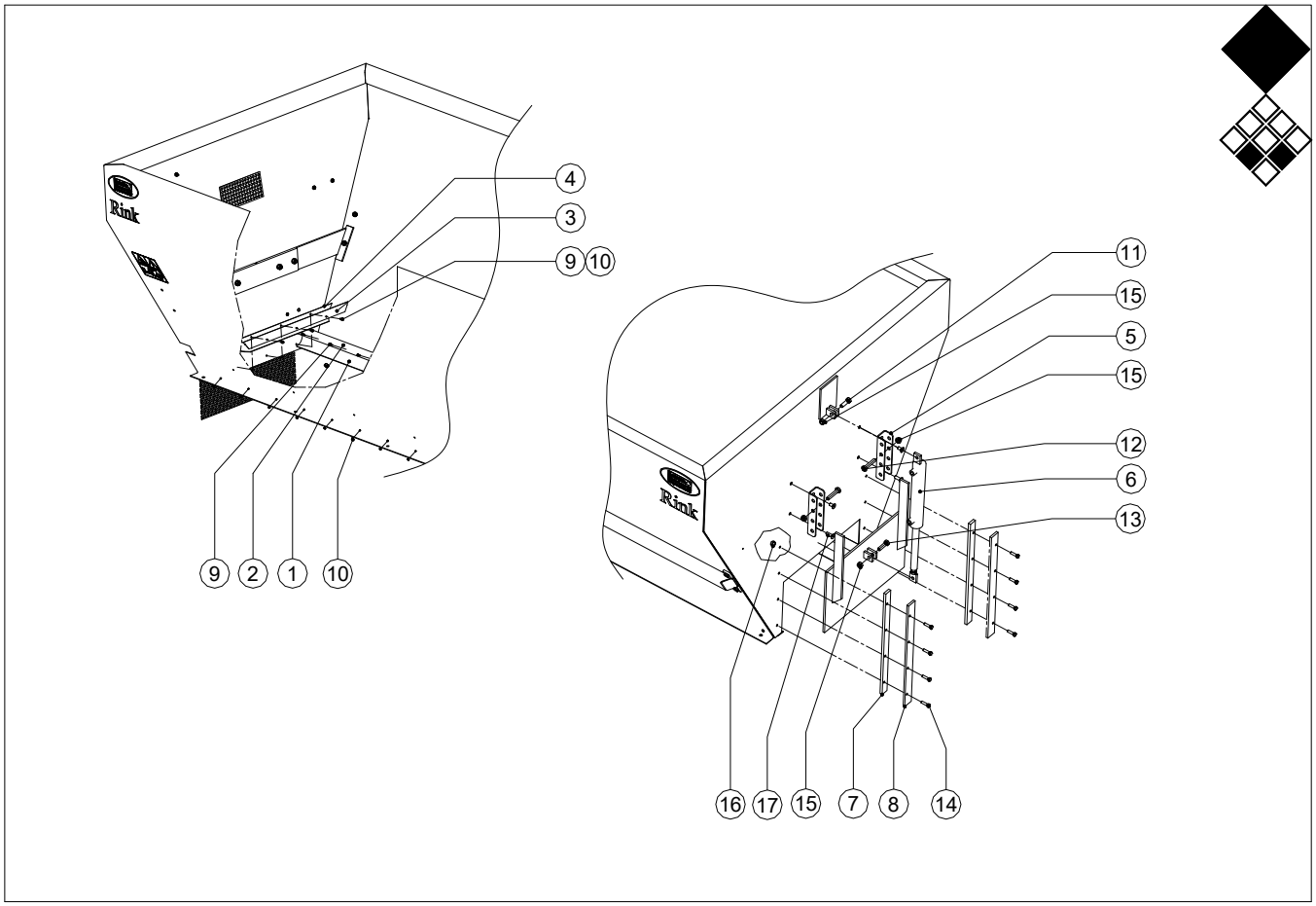

Redexim-Charterhouse Rink DS 3800 pag 05 code 0207

	PART #	DESCRIPTION	REMARKS	QUA
1	RGS 16595	Clamp strip rubber seal side		2
2	RGS 10771	Rubber seal strip side ds 3800		2
3	RGS 16594	Clamp strip rubber seal front		1
4	RGS 10770	Rubber seal strip front DS 3800		1
5	RGS 16360	Gate stop		2
6	RGS 10733	Hydraulic cilinder DS 3800		1
7	RGS 16634	Steel strip		2
8	RGS 16633	Steel strip		2
9	804.050.120	Bolt M5x12		37
10	826.050.050	Nut M5		37
11	802.120.400	Bolt M12x40		1
12	802.120.600	Bolt M12x60		2
13	802.120.450	Bolt M12x45		1
14	804.080.300	Bolt M8x30		8
15	830.120.120	Nut M12		4
16	826.080.080	Nut M8		8
17	816.100.200	Bolt M10x20		4

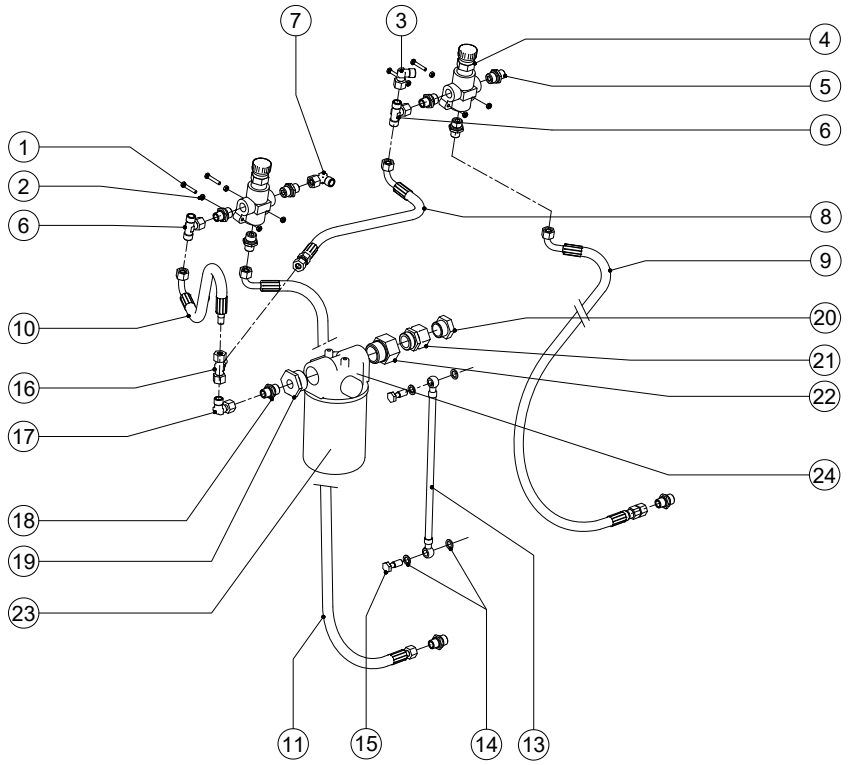

Redexim-Charterhouse Rink DS 3800 pag 06 code 1832

	PART #	DESCRIPTION	REMARKS	QUA
1	802.060.350	Bolt M6x35		4
2	830.060.060	Self lock nut M6		4
3	RGS 10014	Nipple		1
4	RGS 10005	Volume regulator		2
5	RGS 10662	Nipple		3
6	RGS 10043	Nipple		2
7	RGS 10099	Nipple		3
8	RGS 10791	Hose 10 x 500		1
9	RGS 10666	Hose 10 x 1200		1
10	RGS 10792	Hose 12 x 500		1
11	RGS 10793	Hose 12 x 1200		1
13	RGS 10643-31.001	Hose		1
14	RGS 10643-31.002	Cupper washer		4
15	RGS 10643-31.003	Hole bolt		2
16	RGS 10643-31.004	Nipple		1
17	RGS 10643-31.005	Nipple		1
18	RGS 10643-31.006	Nipple		1
19	RGS 10643-31.007	Nipple		1
20	RGS 10643-31.008	Nipple		1
21	RGS 10643-31.009	Nipple		1
22	RGS 10643-31.010	Nipple		1
23	RGS 10643-31.011	Filter		1
24	RGS 10643-31-012	Filer house		1

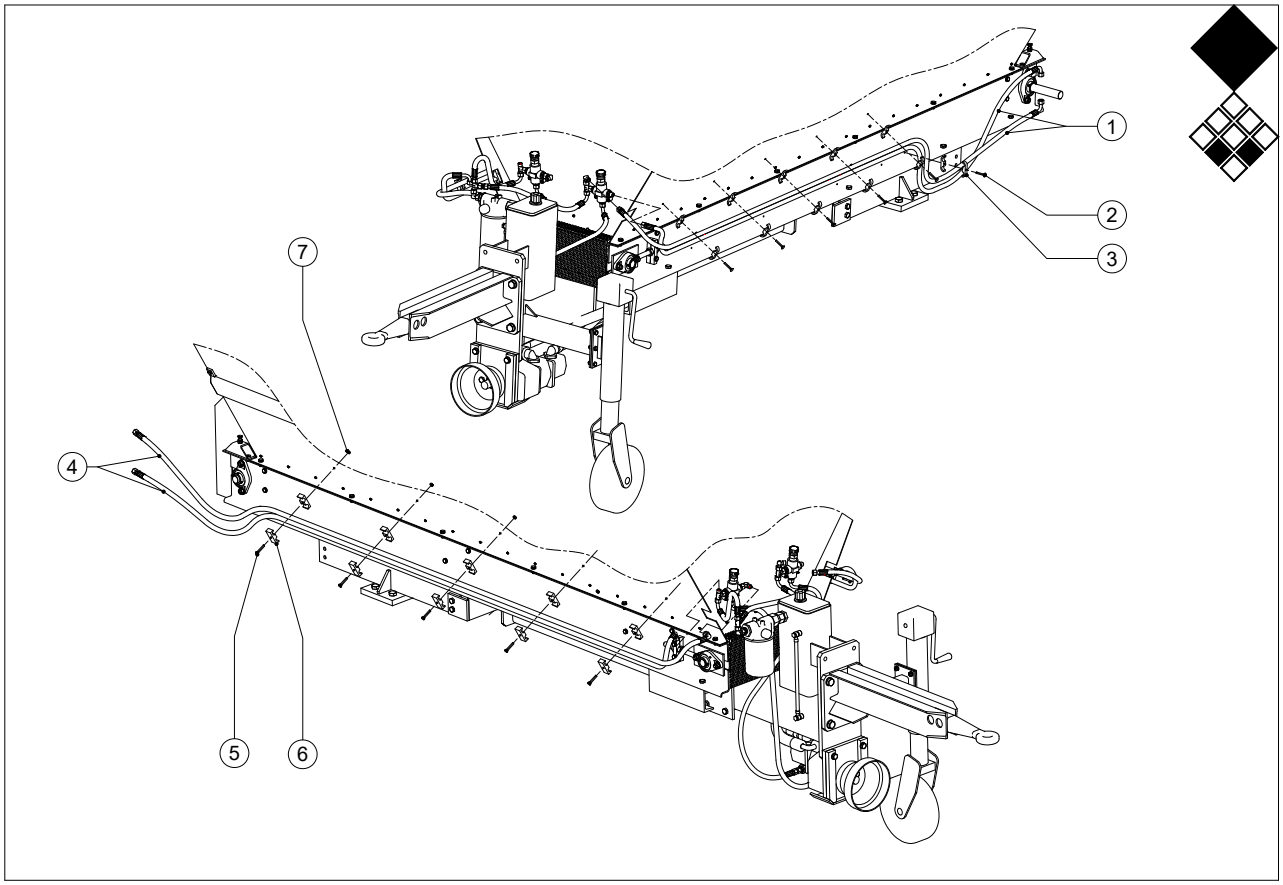

Redexim-Charterhouse Rink DS 3800 pag 07 code 0207

	PART #	DESCRIPTION	REMARKS	QUA
1	RGS 10790	Hose 10 x3300		1
2	802.060.350	Bolt M6 x 35		5
3	RGS 10745	Clamp		5
4	RGS 10789	Hose 12 x 3600		2
5	802.080.400	Bolt M8 x 40		5
6	RGS 10783	Clamp		5
7	830.080.080	Self lock nut M 8		5

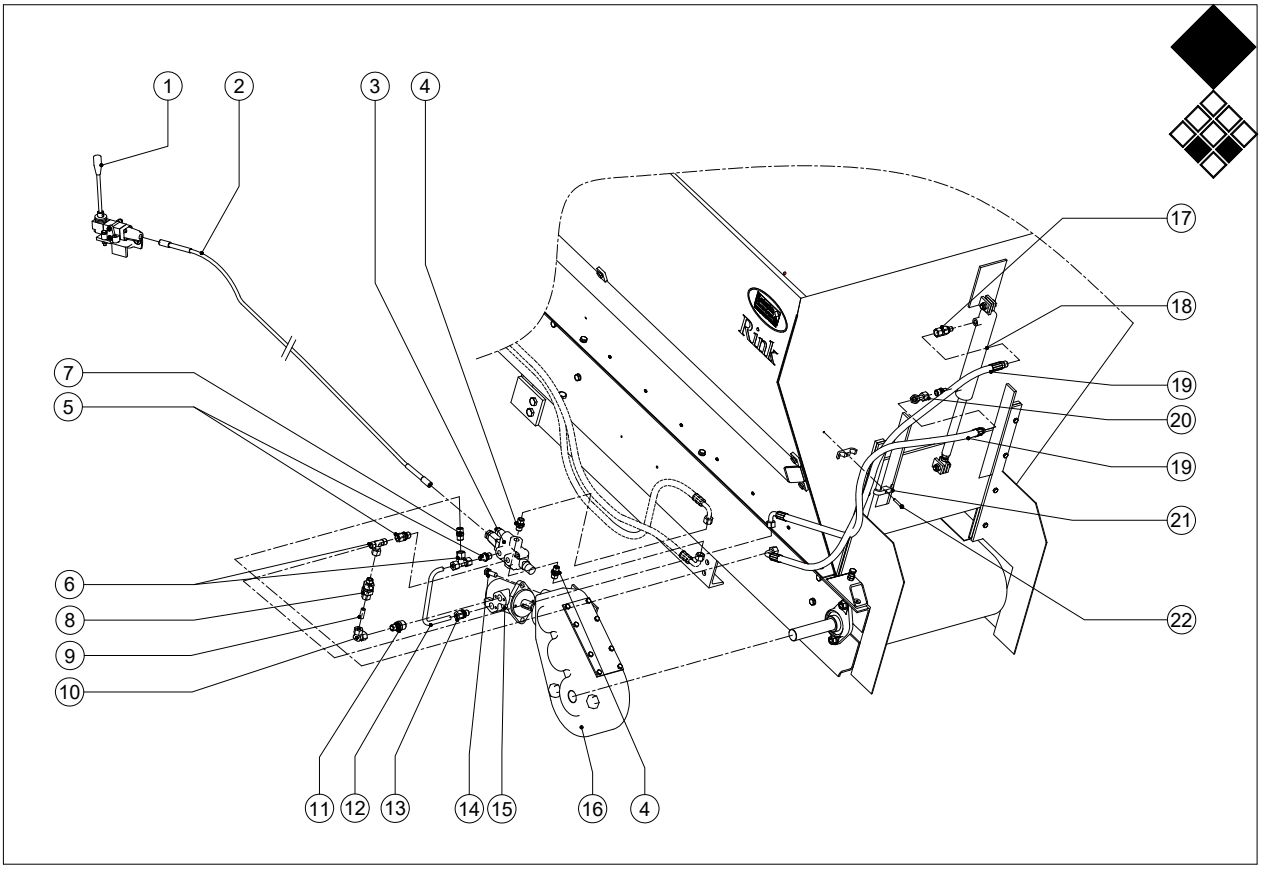

Redexim-Charterhouse Rink DS 3800 pag 08 code 0207

	PART #	DESCRIPTION	REMARKS	QUA
1		Valve complete	See page 10	1
2	RGS 10722-01	Cable		1
3	RGS 10669	Valve		1
4	RGS 10660	Nipple		2
5	RGS 10008	Nipple		2
6	RGS 10043	Nipple		2
7	RGS 10663	Nipple		2
8	RGS 10341	One way valve		1
9	RGS 10040	Nipple		1
10	RGS 10014	Nipple		1
11	RGS 10662	Nipple		2
12	RGS 19400	Tube		1
13	RGS 10664	Nipple		1
14	804.120.350	Bolt M12 x 35		2
15	RGS 10776	Hydraulic motor OMP 40		1
16	RGS 10712	Gearbox		1
17	RGS 10008	Nipple		1
18	RGS 10733	Cilinder		1
19	RGS 10666	Hose 10 x 1200		2
20	RGS 10660	Nipple		1
21	RGS 10745	Clamp		1
22	802.080.400	Bolt M8 x 40		1

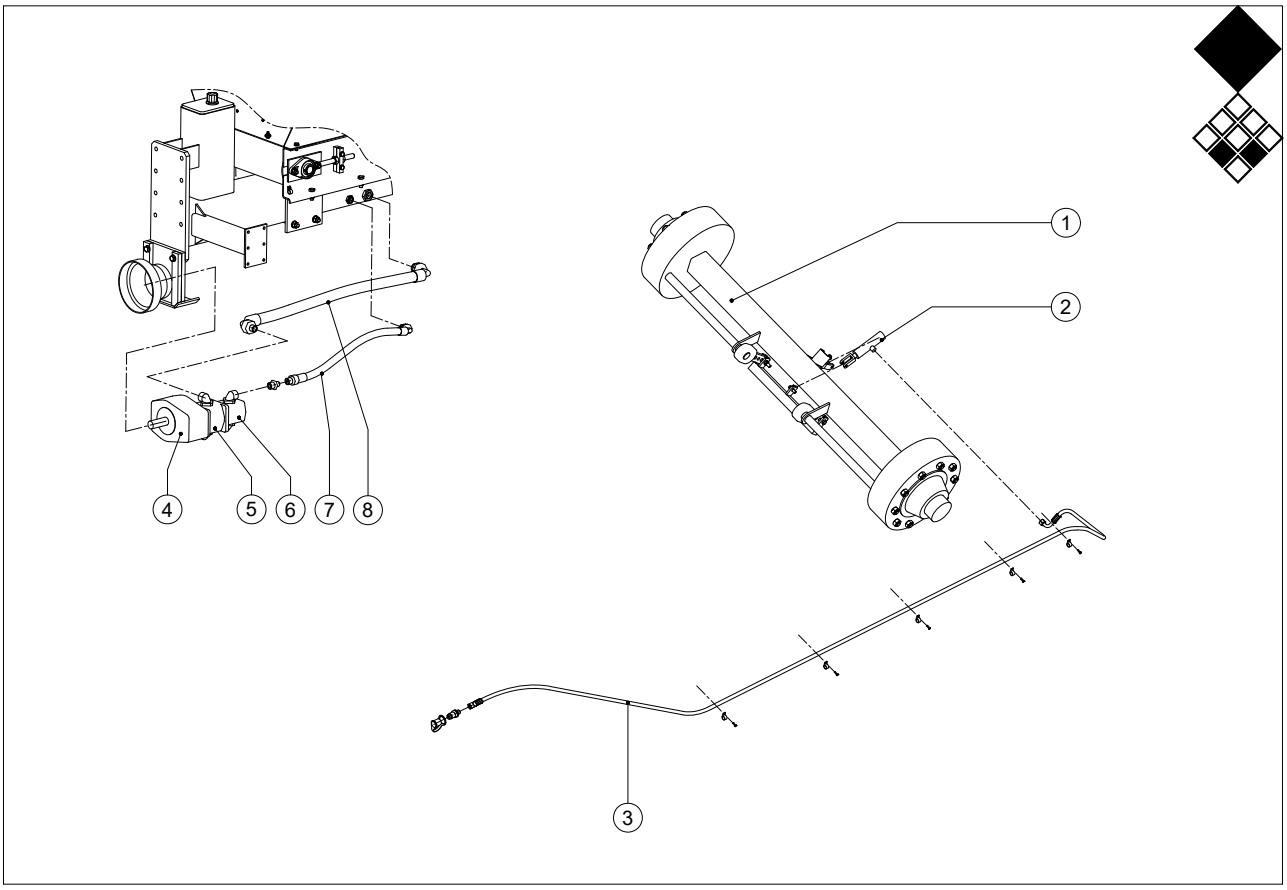

Redexim-Charterhouse Rink DS 3800 pag 09 code 0207

	PART #	DESCRIPTION	REMARKS	QUA
1	RGS 16653	Brake axle		1
2	RGS 19401	Brake cilinder		1
3	RGS 10643-31.013	Hydraulic hose for brake cilinder		1
4	RGS 10643-31.014	Pump Gear box		1
5	RGS 10643-31.015	Pump		1
6	RGS 10643-31.016	Pump		1
7	RGS 10643-31.017	Hose		1
8	RGS 10643-31.018	Hose		1
9				
10				
11				
12				
13				
14				
15				

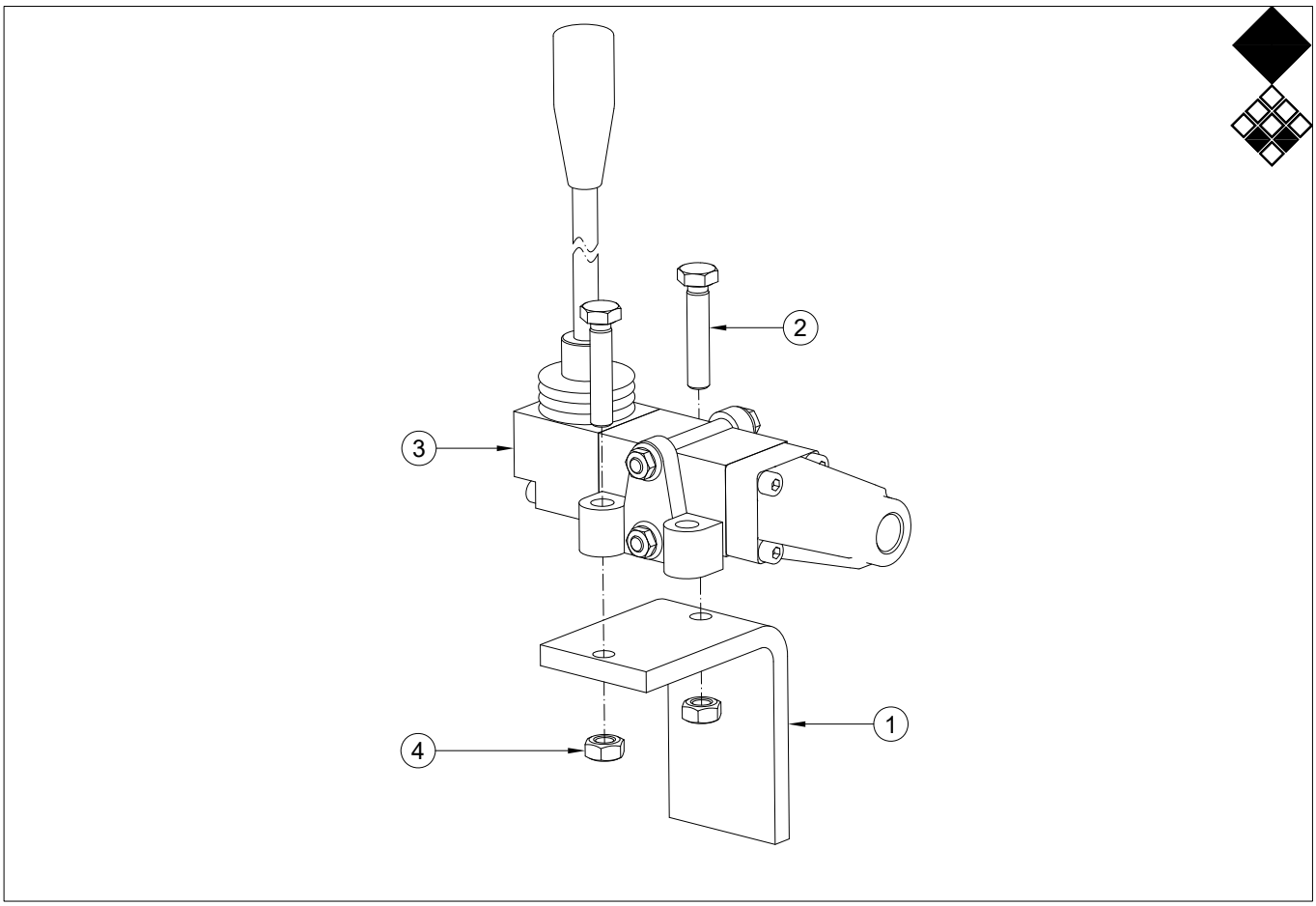

Redexim-Charterhouse Rink DS 3800 pag 10 code 1832

	PART #	DESCRIPTION	REMARKS	QUA
1	RGS 16378	Bracket		1
2	804.080.400	Bolt M8 x 40		2
3	RGS 10722	Valve complete		1
4	830.080.080	Nut M8		2

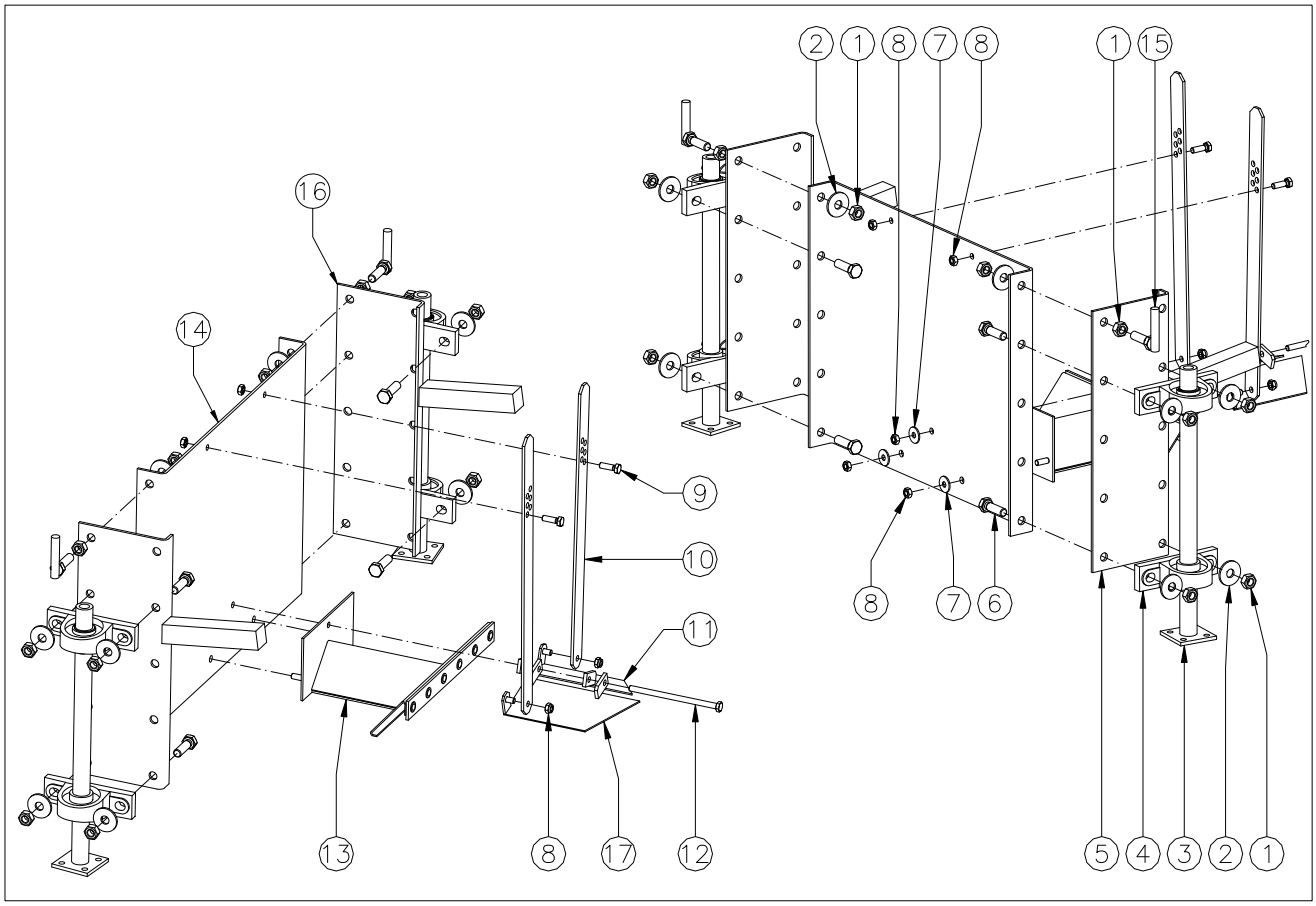

Redexim-Charterhouse Rink DS 3800 pag 11 code 0207

	PART #	DESCRIPTION	REMARKS	QUA
1	826.120.120	Nut M12		12
2	866.120.020	Spring washer M12		10
3	RGS 16620	Shaft		2
4	RGS 10256	Bearing support		4
5	RGS 16618-R	Spinner shaft holder right		1
6	804.120.400	Bolt M12 x 40		8
7	864.080.031	Large washer M8		7
8	830.080.080	Self lock nut M8		7
9	802.080.200	Bolt M8 x 20		2
10	RGS 16632	Sand quide plate adjust handle		2
11	RGS 16662-R	Sand plate right		1
12	802.081.400	Bolt M8 x 140		1
13	RGS 16658	Basic sand quide plate		1
14	RGS 16597	Rear plate		1
15	RGS 16379	Motor torque bolt		2
16	RGS 16618-L	Spinner shaft holder left		1
17	RGS 16662-L	Sand plate left		1

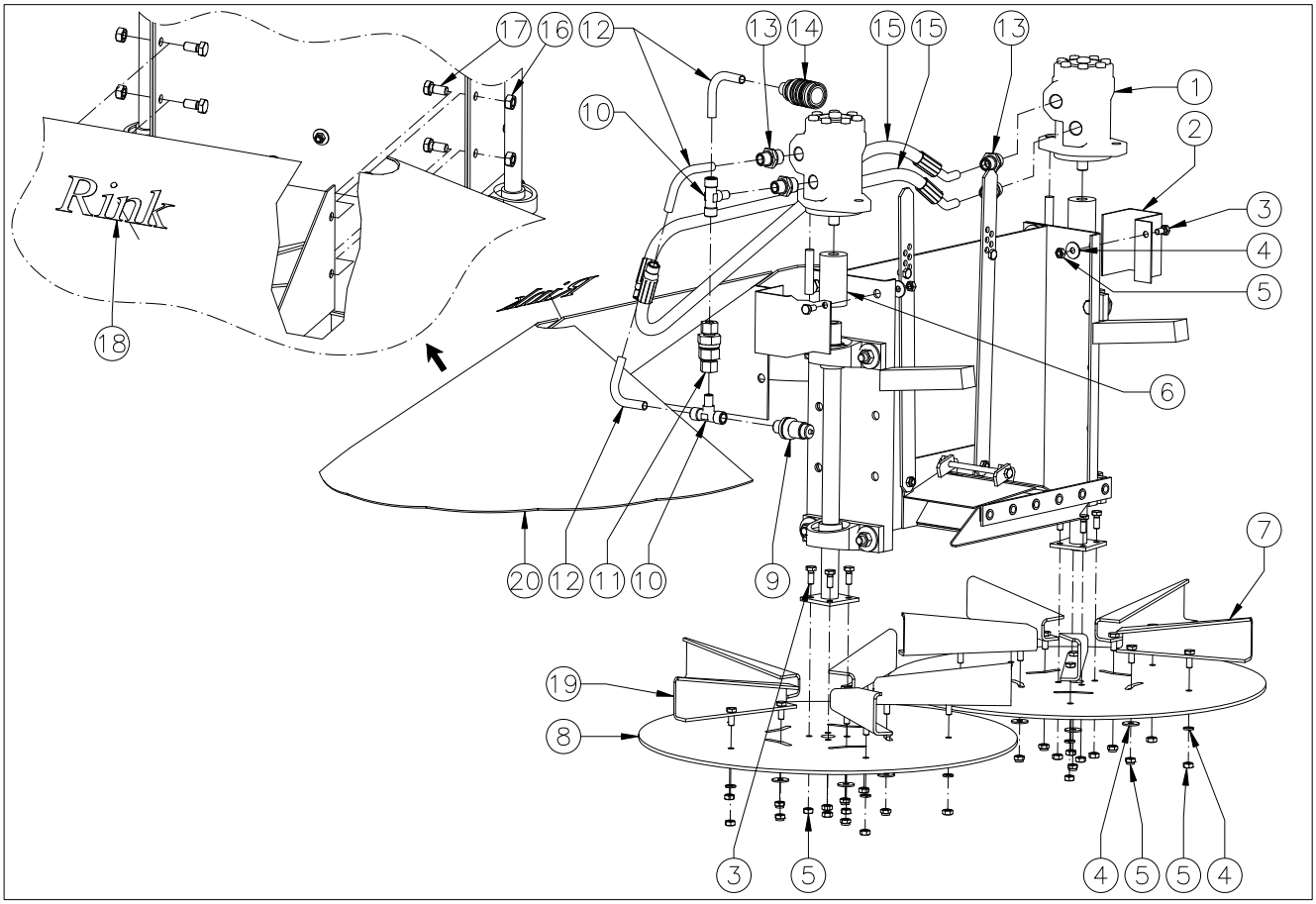

Redexim-Charterhouse Rink DS 3800 pag 12 code 1832

	PART #	DESCRIPTION	REMARKS	QUA
1	RGS 10140	Hydraulic motor		2
2	RGS 16381	Disc shaft cover		2
3	804.080.200	Bolt M8 x 20		2
4	864.080.030	Washer M8		26
5	830.080.080	Lock nut M8		26
6	RGS 15137	Connecting sleeve		2
7	RGS 16385-L	Vane Left	Till sn. 721057	6
	RGS 16437-L	Vane left	From sn. 721066	6
8	RGS 16593	Disc		2
9	RGS 10786	HD-Male		1
10	RGS 10782	Nipple		2
11	RGS 10340	Reverse valve		1
12	RGS 19402	Tube		1
13	RGS 10780	Nipple		4
14	RGS 10785	HD-Female		1
15	RGS 10788	Hydraulic hose 12x850		2
16	826.100.100	Nut M10		4
17	802.100.300	Bolt M10 x 30		4
18	933.260.402	Decall Rink		1
19	RGS 16385-R	Vane Right	Till sn. 721057	6
	RGS 16437-R	Vane Right	From sn. 721066	6
20	RGS 16623	Spinner cover		1